THIS DRAWING IS THE PROPERTY OF VOLVO PENTA AB. DISTRIBUTION OR ANY ALTERATION MADE WITHOUT WRITTEN PERMISSION IS NOT PERMITTED. THIS DRAWING IS TO BE RETURNED ON REQUEST.
CAD

- (A) WATER FILLER CAP FRESH WATER
- (B) OIL FILLER CAP, ENGINE
- (C) OIL DIP STICK, ENGINE
- (D) OIL DRAIN (WITH PUMP), ENGINE
- (E) OIL FILTER
- (F) LIFTING DEVICE
- (G) WATER DRAIN, FRESH WATER
- (H) WATER DRAIN, SEA WATER
- (I) AIR FILTER
- (J) FUEL FILTER
- (K) HEAT WATER OUTLET COMPRESSION SIDE 1/2-14 NPSF
- (L) HEAT WATER OUTLET LOW SIDE 1/2-14 NPSF
- (M) WATER INLET FOR HOSE D 32 G1,25J I.D
- (N) WATER COLED EXHAUST PIPE D 89 G3,5J I.D
- (O) CONNECTION BOX
- (P) OILCOOLER, REVERSE GEAR
- (Q) OIL DIPSTICK, REVERSE GEAR
- (R) OIL SUCTIONBFILTER REVERSE GEAR
- (S) CONTROL CABLE
- (T) CENTRE OF GRAVITY
- (U) OIL DRAIN REVERSING GEAR (WITH PUMP)

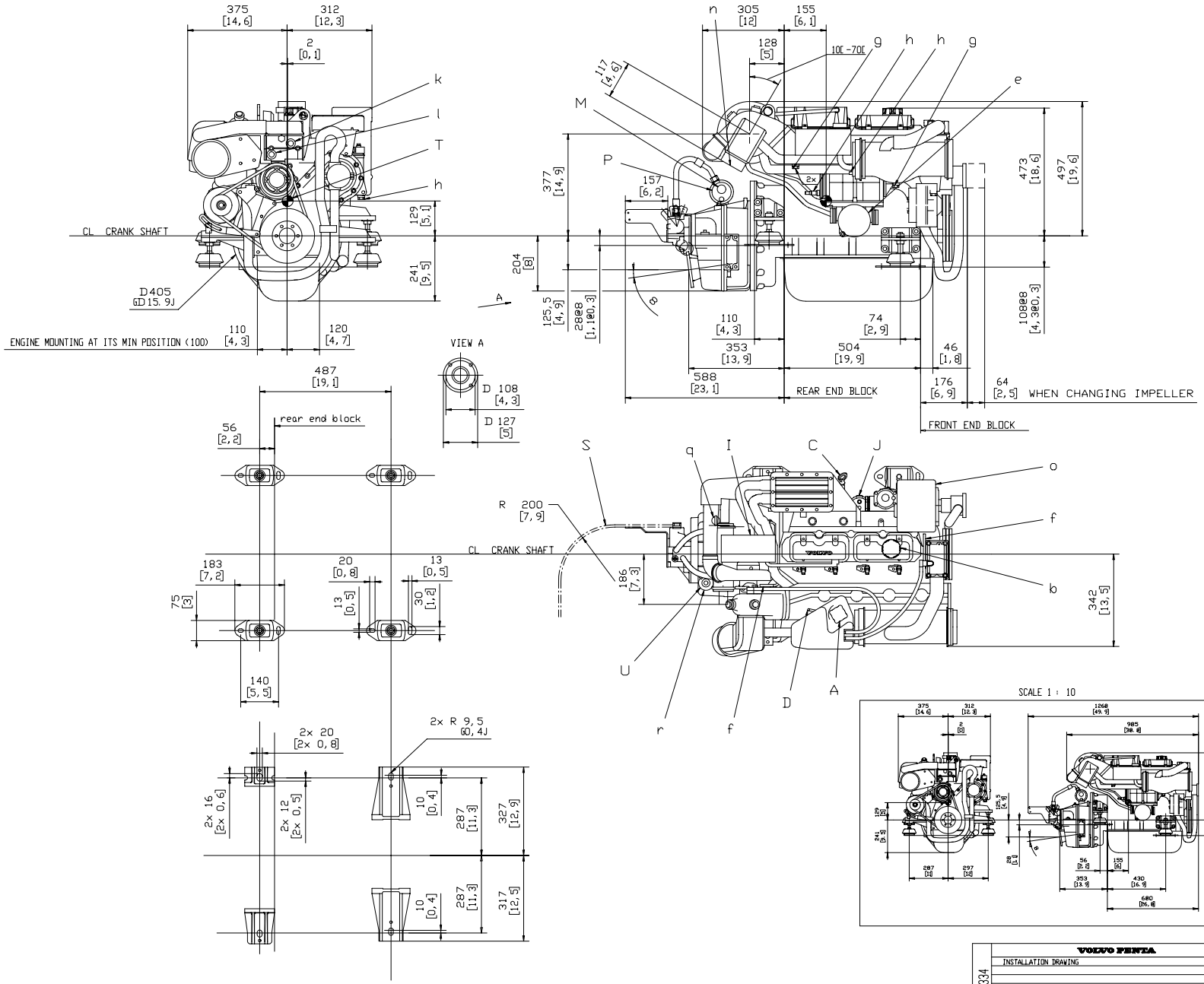

DIMENSION IN MILLIMETRES AND INCHES

VOLVO PENTA

INSTALLATION DRAWING

SCALE	1 : 5	TYP TYPE	TAMD31M / L / P-HS45A
DRAWN	MR	980202	
CHECKED	RW	980318	
APPROVED	PC	980318	
REPR. NO DRAWING NO	3590334		
REPR. NO DRAWING NO	3590334		
REV	02		