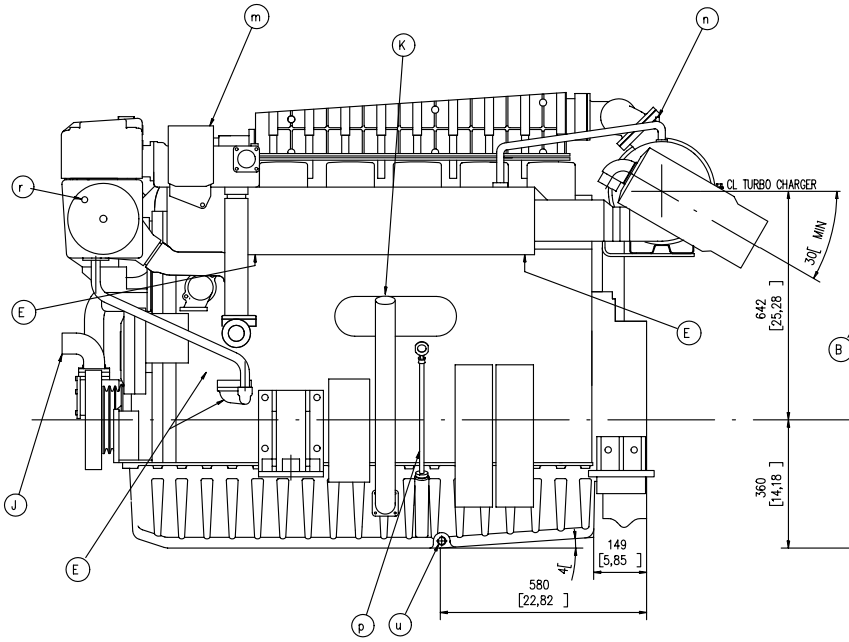

1655 KG
(WITHOUT WATER AND OIL)

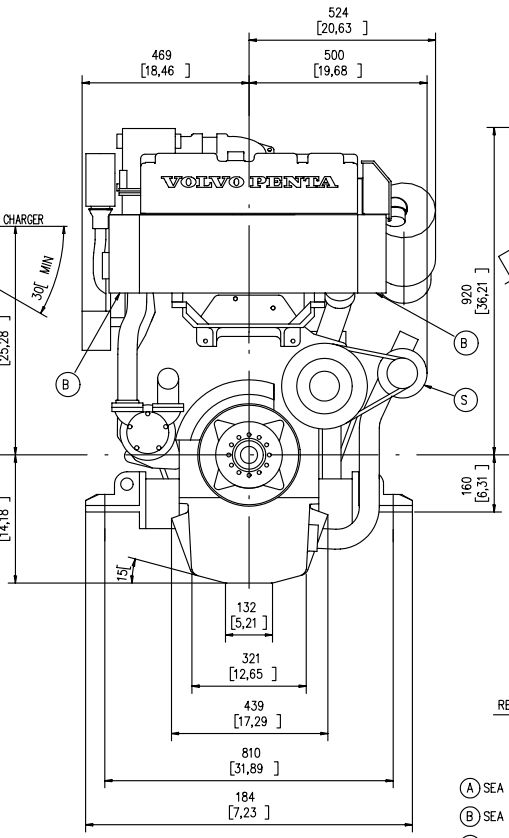

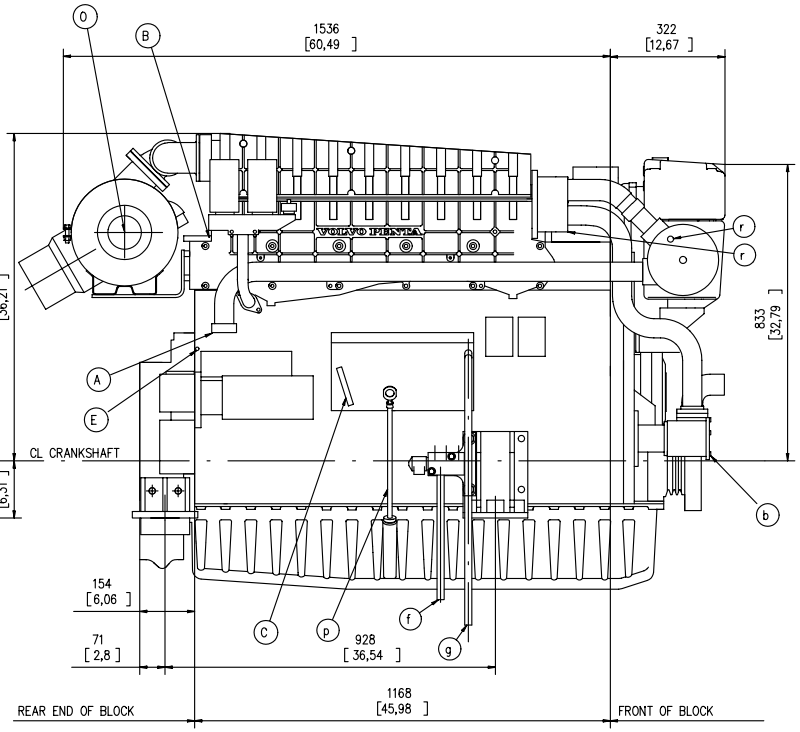

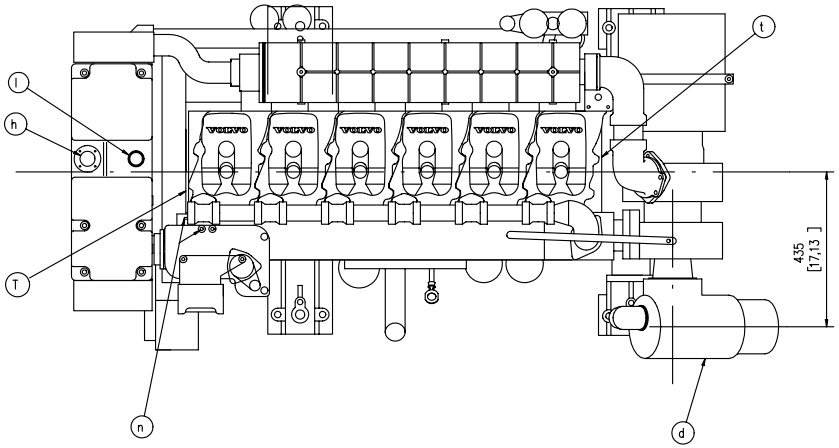

(A) SEA WATER OUTLET
(B) SEA WATER DRAIN (4X)
(C) SPEED CONTROL LEVER
(D) WET EXHAUST BEND. OPTION
CONNECTION FOR HOSE INS.DIA 6"OR 7"
(DI=152,4 OR 177,8 mm)
(E) FRESH WATER DRAIN (5X)
(F) FUEL INLET FOR PIPE D y=10 mm
(G) FUEL RETURN FOR PIPE D y=10 mm
(H) LIQUID-LEVEL FRESH WATER. OPTION
(J) SEA WATER INLET NIPPLE FOR 2 1/2" I.D. HOSE (DY 63 mm)
(K) OIL FILLER
(L) FRESH WATER FILLER ENGINE
(M) ELECTRIC CENTRAL UNIT
(N) VENTILATING COCK (3X)
(O) AIR INLET
(P) OIL DIP STICK ALT. LOCATION
(R) ZINC ANODE (2X)
(S) ALTERNATOR
(T) LIFTING EYE BOLTS (2X)
(U) OIL DRAIN

DIMENSIONS IN MILLIMETRES AND INCHES

VOLVO PENTA
DIMENSION DRAWING

M406
891919

B-29333

SCALE	1:5		
DRAWN	TbL	930819	TAMD 163 P
CHECKED	BS	930913	891919
APPROVED	Let	930914	03