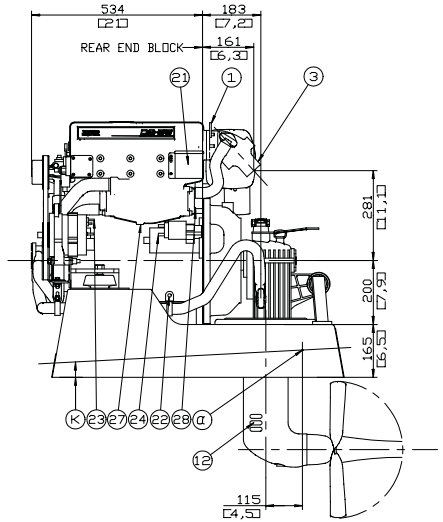

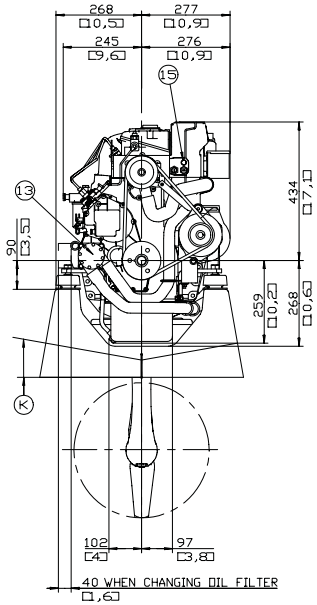

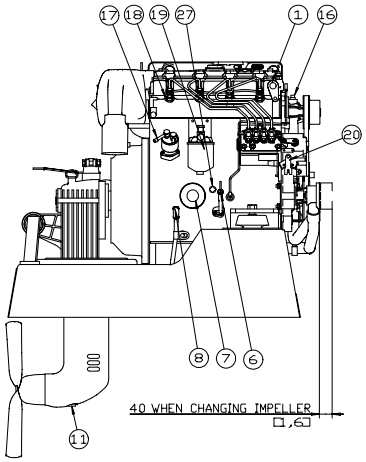

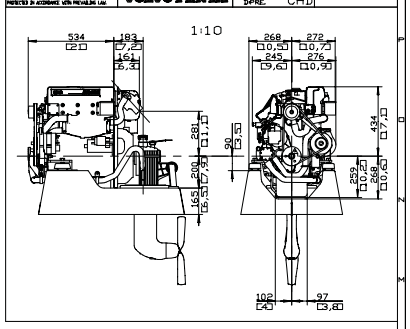

K LOWER EDGE TO BE CUT ACC. TO HULL FORM
α REF POINT. SEE INST HANDBOOK PUBL No 5292
1 LIFTING DEVICE

3 EXHAUST ELBOW FOR HOSE I.D 57
4 AIR FILTER
5 OIL FILLING
6 OIL DIPSTICK ENGINE
7 OIL FILTER
8 OIL DRAIN FOR PUMP, ENGINE
9 OIL DIPSTICK S-DRIVE
10 OIL FILLER CAP S-DRIVE
11 OIL DRAIN S-DRIVE
12 WATER INLET
13 SEA WATER PUMP
14 WATER FILLER CAP FRESH WATER
15 HEAT WATER OUTLET
16 HEAT WATER INLET
17 FUEL CONNECTION FOR HOSE I.D 9
18 FUEL RETURN CONNECTION FOR HOSE I.D 9
19 FUEL FILTER
20 SPEED CONTROL LEVER
21 CONNECTION BOX FOR EXTENTION CABLE
22 BATTERY MINUS (-) CONNECTION
23 PLUS (+) CONNECTION FOR CHARGING DISTRIBUTOR
24 STARTER BATTERY PLUS (+) CONNECTION
25 CONTROL CABLE
26 AIR INLET SILENCER
27 WATER DRAIN, FRESH WATER
28 WATER DRAIN, SEA WATER

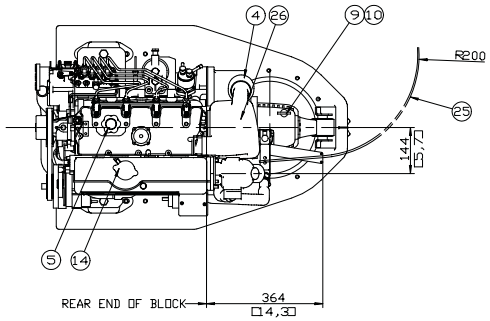

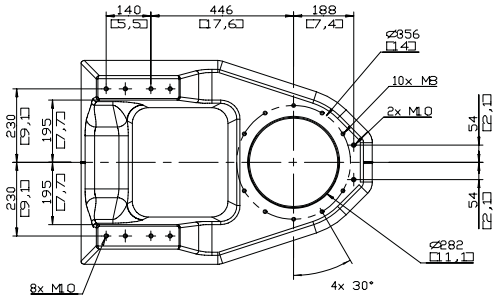

AB VOLVO PENTA			
INSTALLATION DRAWING			
SCALE 1/5		TYPE D2-55 / MS25S	
DRAWN RL/RE		DRAWING NO 3590606	SHEET 01
CHECKED			
APPROVED			