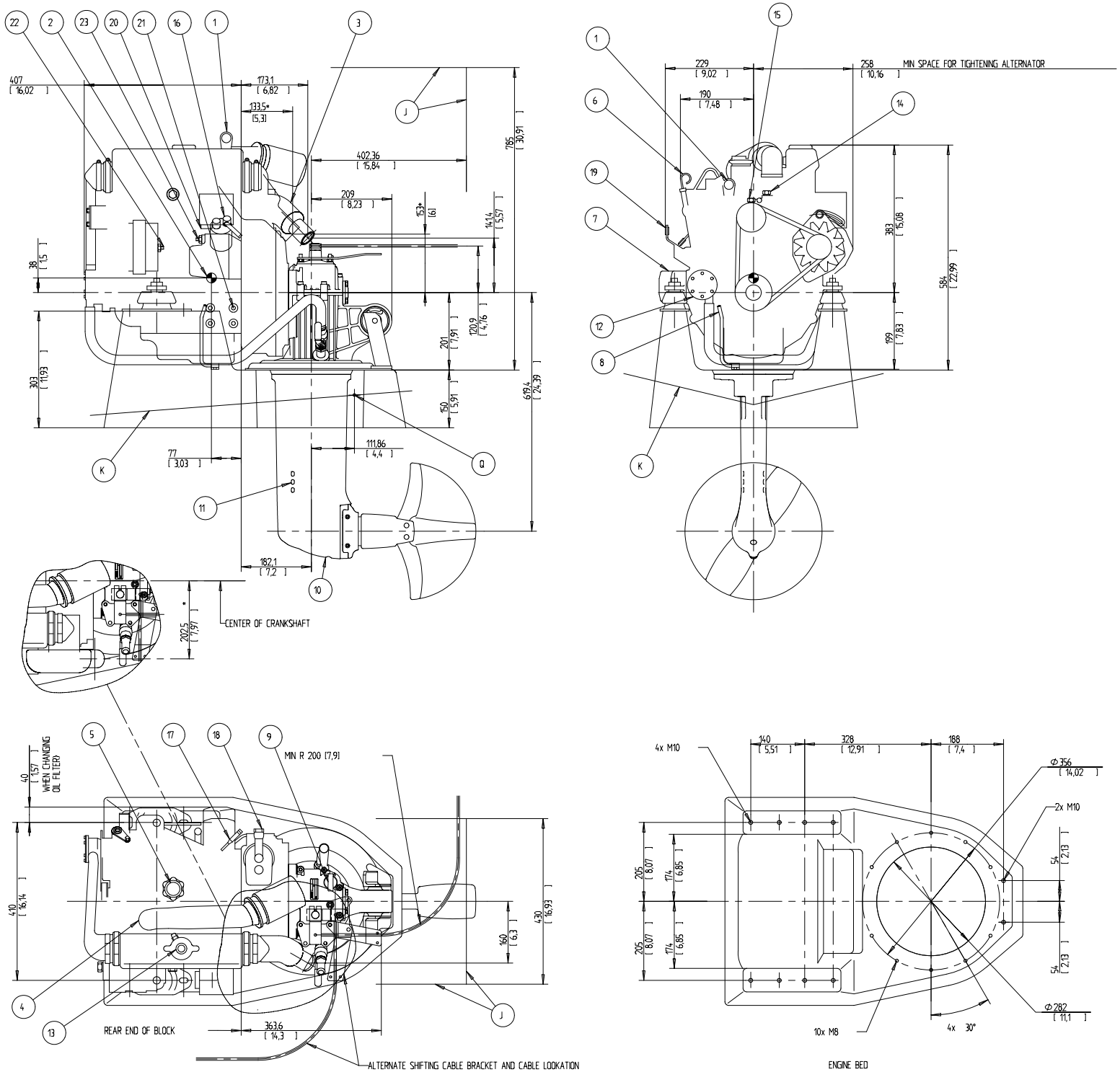

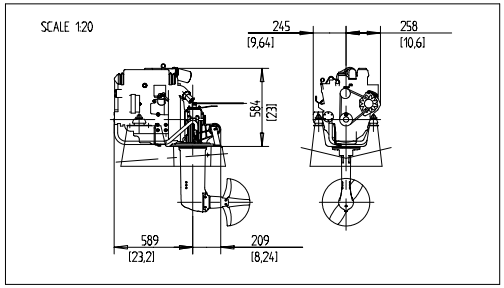

J MIN. SPACE WHEN MOUNTING DRIVE UNIT
K LOWER EDGE TO BE CUT ACC. TO HULL FORM
Q REF. POINT. SEE INSTALLATION HANDBOOK
1 LIFTING DEVICE
2 CENTRE OF GRAVITY
3 EXHAUST ELBOW FOR HOSE I.D 44 [1,75]
4 AIR FILTER
5 OIL FILLING, ENGINE
6 OIL DIPSTICK, ENGINE
7 OIL FILTER, ENGINE
8 OIL DRAIN (WITH PUMP) ENGINE Ø10
9 OIL DIPSTICK / OIL FILL CAP, DRIVE
10 OIL DRAIN, DRIVE
11 WATER INLET, DRIVE
12 SEA WATER PUMP
13 WATER FILLER CAP FRESH WATER
14 HEAT WATER OUTLET
15 HEAT WATER INLET
16 FUEL CONNECTION FOR HOSE I.D 9(3/8)
17 FUEL RETURN CONNECTION FOR HOSE I.D 9(3/8)
18 FUEL FILTER
19 SPEED CONTROL LEVER
20 CONNECTING BOX FOR EXTENSION CABLE
21 BATTERY MINUS (-) CONNECTION
22 PLUS (+) CONNECTION FOR CHARGING DISTRIBUTOR
23 STARTER BATTERY PLUS (+) CONNECTION

* DIMENSION WITH EXHAUST RISER (ACCESSORIES)

DIMENSION IN MILLIMETRES AND INCHES WITHIN [ ]

SCALE 1:5

SYMBOLS, DESIGNATIONS AND GENERAL DRAWING METHODS STD 5023501

The copying, distribution and utilization of this document as well as the communication of its contents to others without expressed authorization is prohibited. Offenders will be held liable for payment of damages. All rights reserved in the event of the grant of a patent, utility model or ornamental design registration.

Document title: INSTALLATION DRAWING MD2030-D / 130S

VOLVO PENTA

Document type: DIMENSIONS DRAWING

Owner domain/Document prefix

Document No: 3591339 | Issue index: 01 | Sheet No: 1(1)

SIZE A1