3591358-02 - Heruntergeladen von www.volvopenta.com 20.02.2008 16:27:20

RELEASED

- A WATER FILLER CAP, FRESH WATER
- B OIL FILLER CAP, ENGINE
- C OIL DIP STICK, ENGINE LEFT OR RIGHT SIDE MOUNTED
- D ECU CONTROL UNIT
- E OIL DRAIN (WITH PIPE), ENGINE Ø12.5
- F OIL FILTER MAIN
- G OIL FILTER BYPASS
- H LIFTING EYE
- I WATER DRAIN, FRESH WATER
- J WATER DRAIN, SEA WATER
- K AIR FILTER
- L FUEL FILTER
- M HOT WATER OUTLET Ø16
- N HOT WATER INLET Ø16
- P STRAINER SEA WATER
- Q OIL DIP STICK DRIVE (UNDER COVER)
- R CENTRE OF GRAVITY
- S WATER INLET DRIVE
- T OIL DRAIN DRIVE (BEHIND ADAPTER)
- U FUEL INLET CONNECTION Ø10
- V FUEL RETURN TO TANK Ø10
- X ENGINE STOP
- Y CRANK CASE VENTILATION
- Z EXHAUST RISER Ø127 (5"XOPTION)
- AA X-MESUREMENT SEE 7742299-6
- AB TIE BAR (TWIN INSTALLATION)
- AC EXTRA ALTERNATOR (OPTION)
- AD SEA WATER PUMP

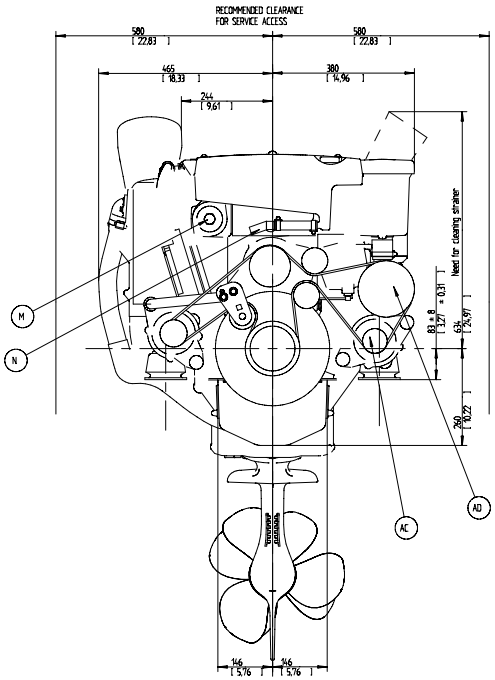

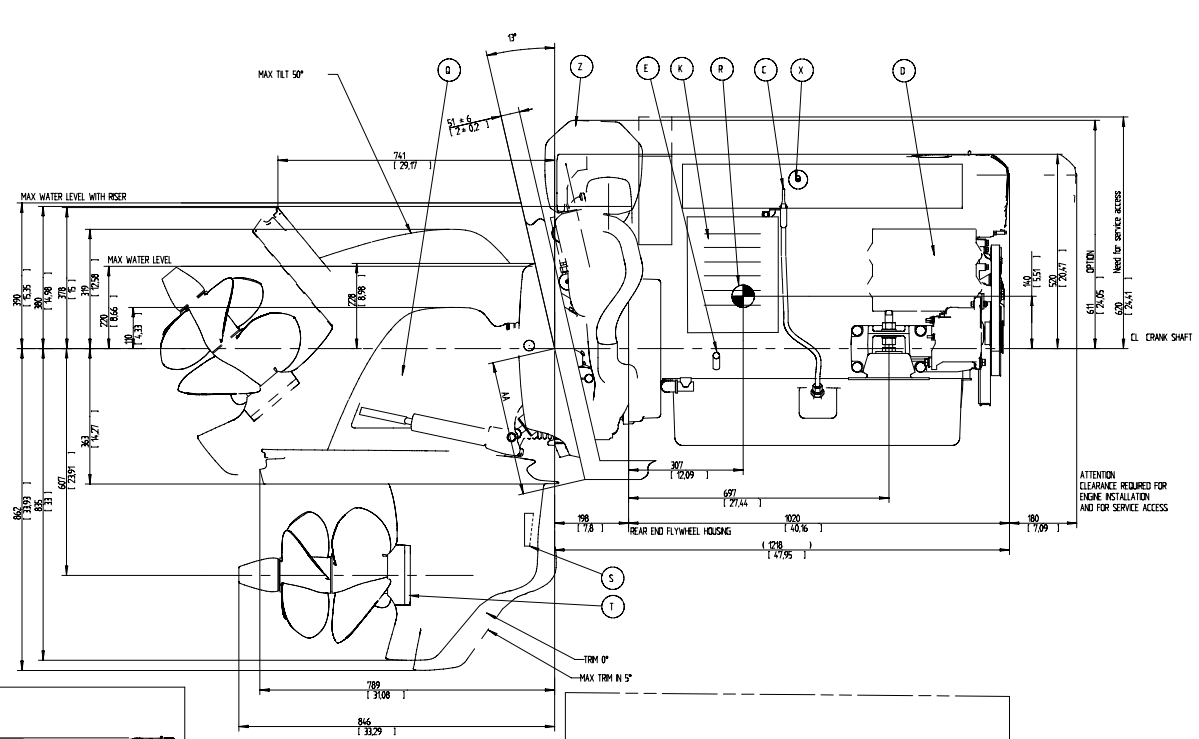

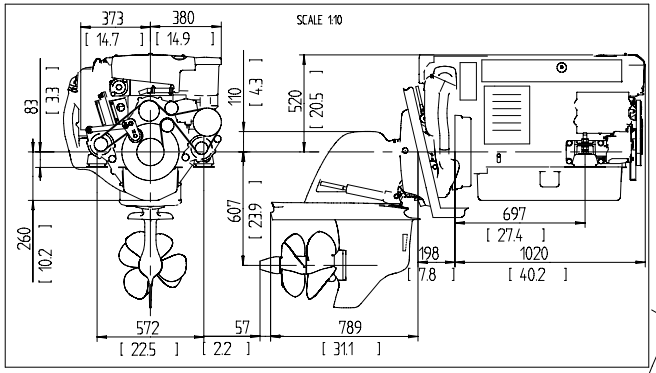

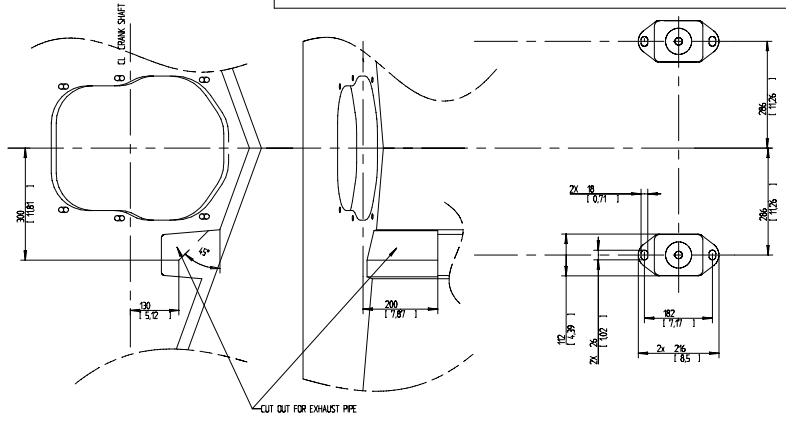

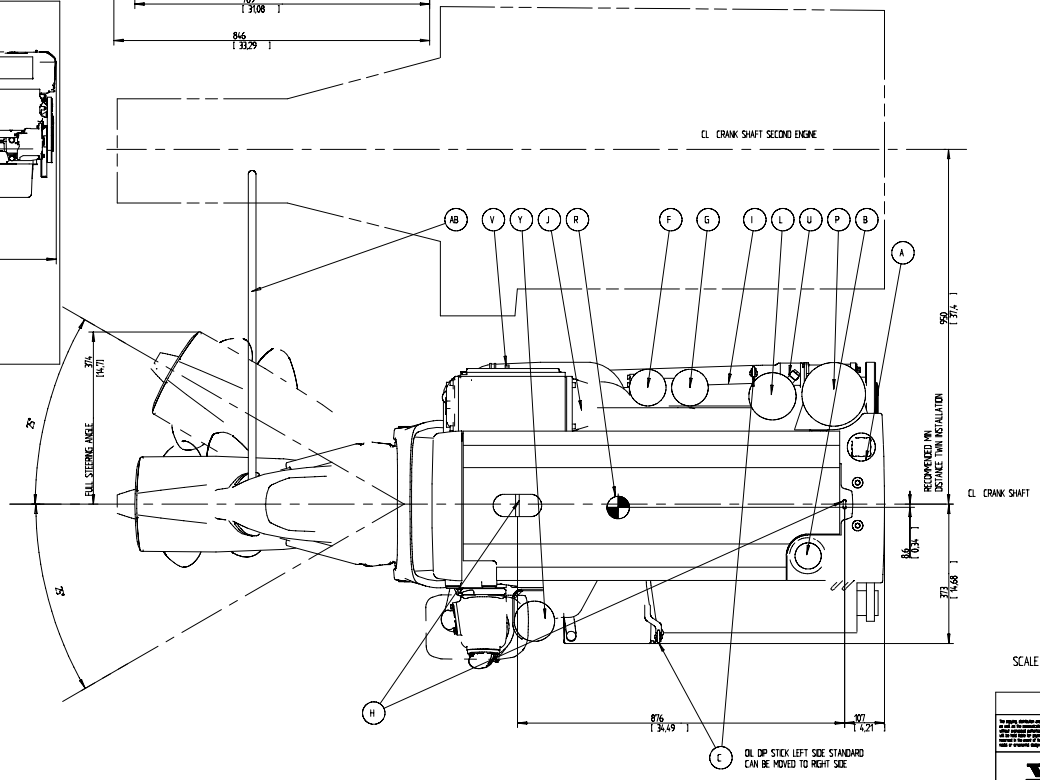

SCALE 1:5

	SYMBOLS, DESIGNATIONS AND GENERAL DIMENSIONS ACCORDING TO ISO 8665 AND ISO 15550
	ENGINE DIMENSIONS D6 / AD-DRIVE DP-H
	DIMENSION DRAWING
VOLVO PENTA	3591358 | 02 | 1(1)