AD31L, AD31P/DP
Drawing no. 3590305

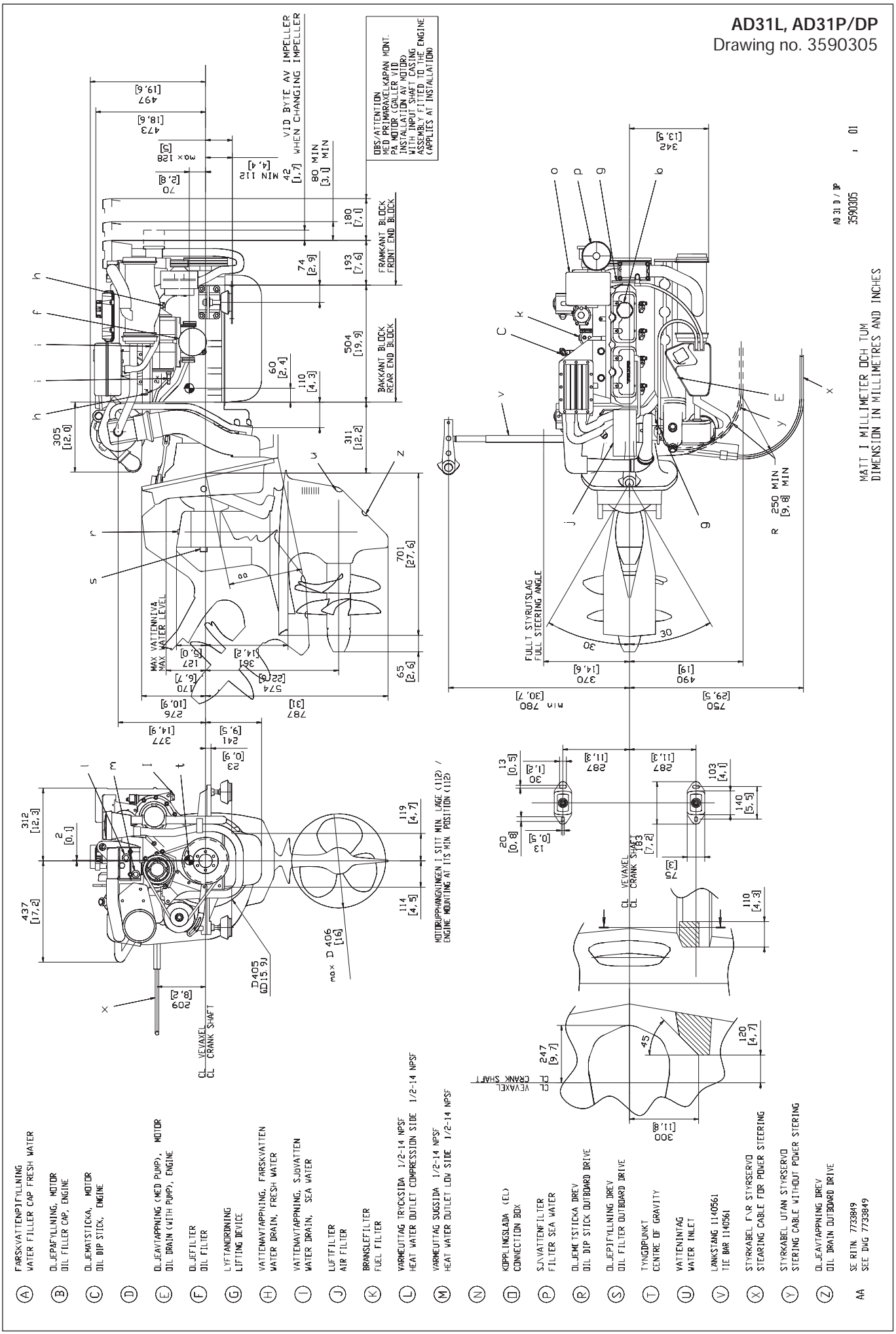

AD31