3591860-01 - Heruntergeladen von www.volvopenta.com 20.02.2008 16:12:25

Reference Number Date Sign	Location	Change description Date Sign Reference	P/A 0 1 2 main
A 46696-00		SEE ECN	

Document status status: RELEASED
Date: 06-09-25
Modification stamp

- (A) WATER FILLER CAP, FRESH WATER
- (B) OIL FILLER CAP, ENGINE
- (C) OIL DIPSTICK, ENGINE LEFT OR RIGHT SIDE MOUNTED
- (D) ENGINE CONTROL UNIT
- (E) OIL DRAIN (WITH PUMP), ENGINE Ø12.5
- (F) OIL FILTER MAIN
- (G) OIL FILTER BYPASS
- (H) LIFTING EYE
- (I) WATER DRAIN, FRESH WATER
- (J) WATER DRAIN, SEA WATER
- (K) AIR FILTER
- (L) FUEL FILTER
- (M) HOT WATER OUTLET
- (N) HOT WATER INLET
- (P) SEA WATER INLET Ø38
- (Q) OIL DIPSTICK REVERSE GEAR
- (R) CENTRE OF GRAVITY
- (T) OIL FILTER AND OIL SUCTION REVERSE GEAR
- (U) FUEL INLET CONNECTION
- (V) FUEL RETURN TO TANK
- (X) ENGINE STOP
- (Y) CRANKCASE VENTILATION
- (Z) EXHAUST RISER Ø 102 (4") (OPTION)
- (AA) SEA WATER PUMP
- (AB) EXHAUST ELBOW Ø102 (4")
- (AC) EXTRA ALTERNATOR

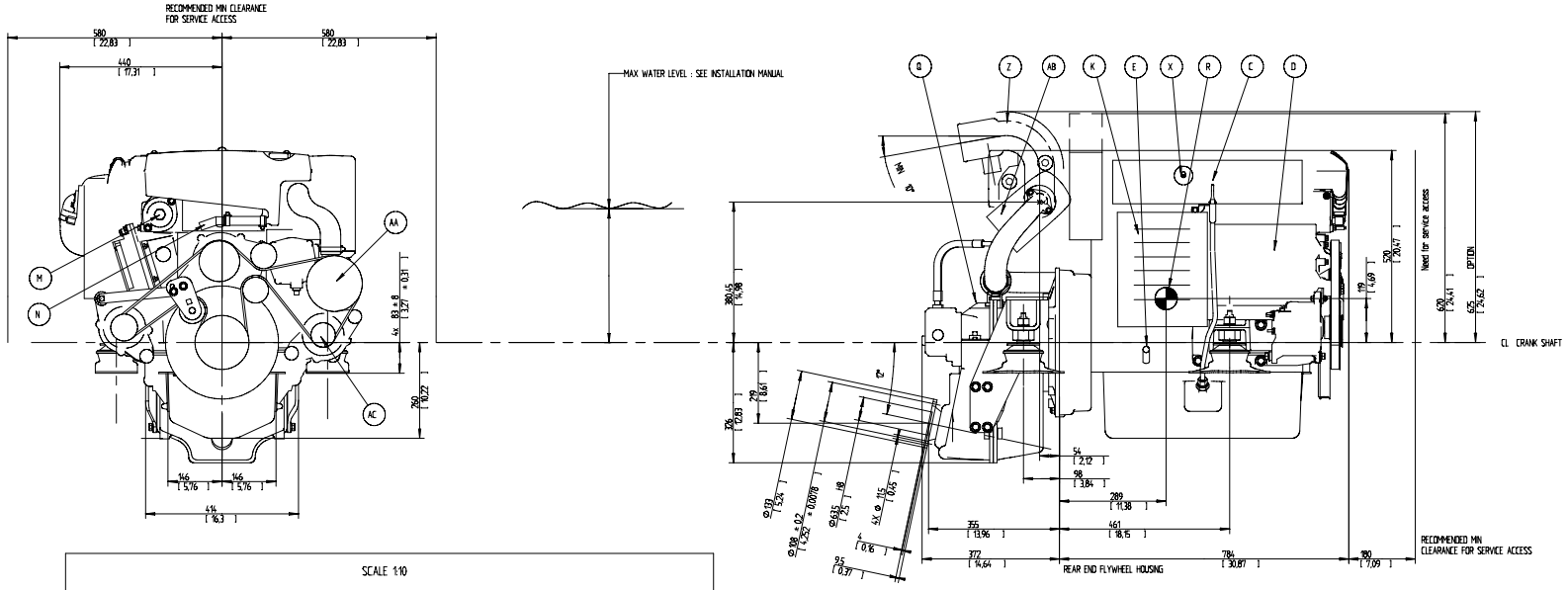

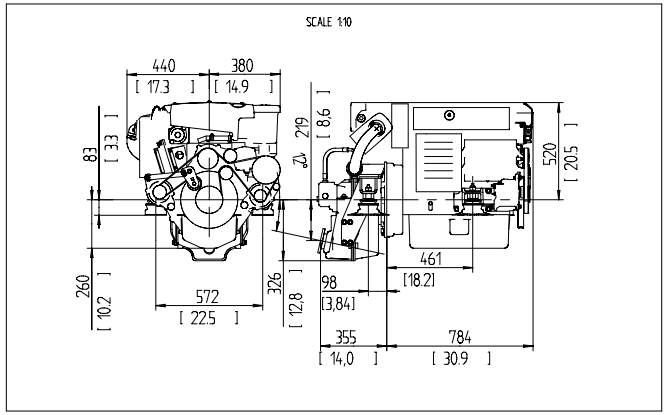

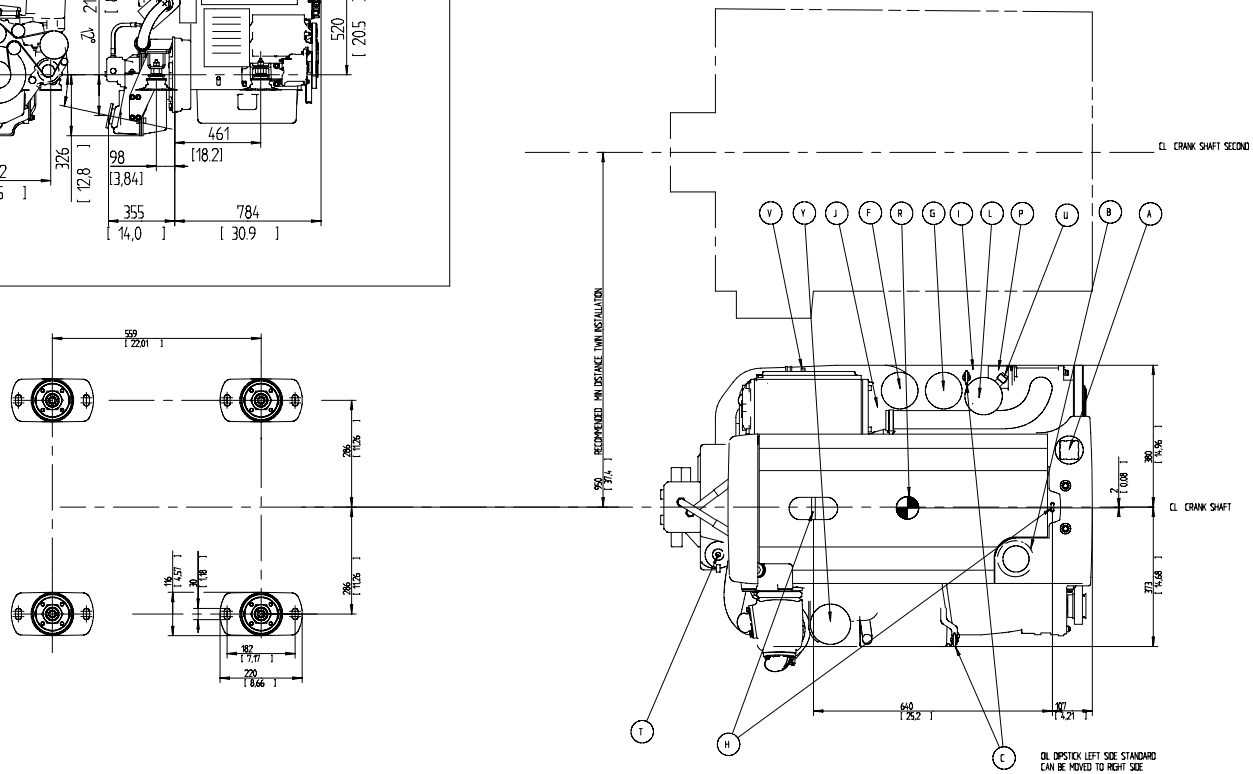

SCALE 15

SYMBOLS, DESIGNATIONS AND GENERAL DRAWING METHODS SIS 01-4000 ISO, SIS 16236:2001

The ideas, designs and information of this document are and are the intellectual property of the company to which the document belongs. The document may not be used or copied without the permission of the company to which the document belongs or be disclosed to third parties in the case of the good of a contract. Only copies of a reasonable number are permitted.

VOLVO PENTA

Product line: ENGINE
D4 / H5639V

Document type: DIMENSION DRAWING
Other manufacturer's parts

Document No: 3591860 | Sheet title: 01 | Sheet No: 1(1)