3591859-01 - Heruntergeladen von www.volvopenta.com 20.02.2008 16:11:14

Engineering Release Date/Stamp	Location	Change description	P/A 0 .	RELEASED
A 46696-00		SEE ECN	0 1 3 . 1989	Date 06-09-25

- (A) WATER FILLER CAP, FRESH WATER
- (B) OIL FILLER CAP, ENGINE
- (C) OIL DIP STICK, ENGINE LEFT OR RIGHT SIDE MOUNTED
- (D) ECU CONTROL UNIT
- (E) OIL DRAIN (WITH PUMP), ENGINE Ø12.5
- (F) OIL FILTER MAIN
- (G) OIL FILTER BYPASS
- (H) LIFTING EYE
- (I) WATER DRAIN, FRESH WATER
- (J) WATER DRAIN, SEA WATER
- (K) AIR FILTER
- (L) FUEL FILTER
- (M) HOT WATER OUTLET
- (N) HOT WATER INLET
- (P) SEA WATER INLET Ø38
- (Q) OIL DIP STICK REVERSE GEAR
- (R) CENTRE OF GRAVITY
- (S) ELASTIC SUSPENSIONS 4x
- (T) OIL FILTER AND OIL SUCTION REVERSE GEAR
- (U) FUEL INLET CONNECTION
- (V) FUEL RETURN TO TANK
- (X) ENGINE STOP
- (Y) CRANK CASE VENTILATION
- (Z) EXHAUST RISER Ø 102 (4") (OPTION)
- (AA) SEA WATER PUMP
- (AB) EXHAUST ELBOW Ø102 (4")
- (AC) EXTRA ALTERNATOR

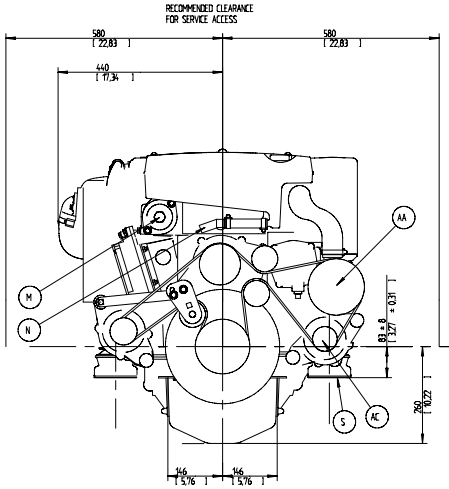

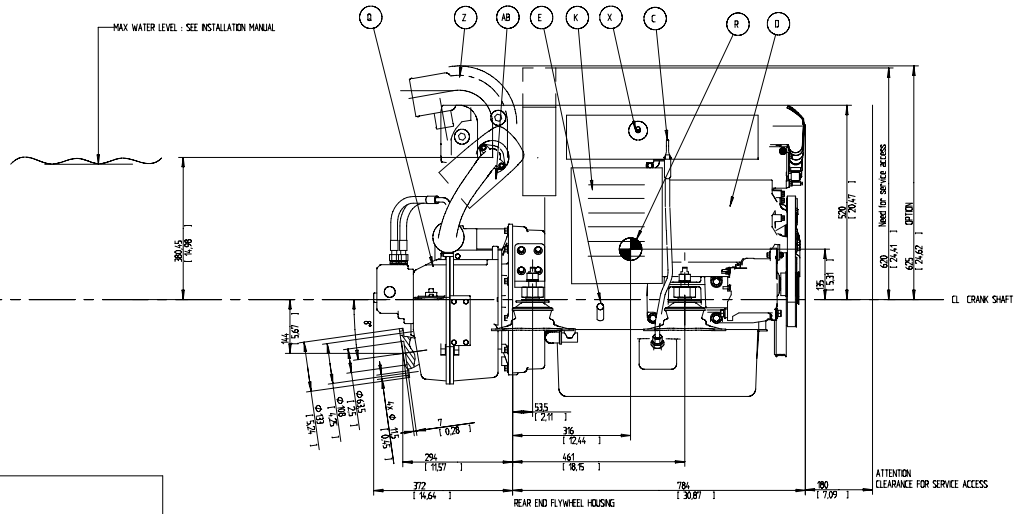

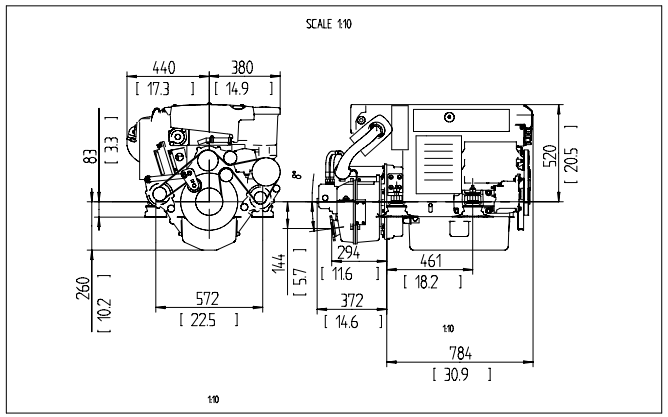

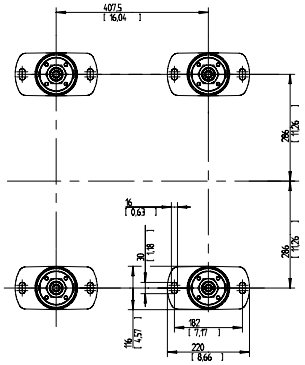

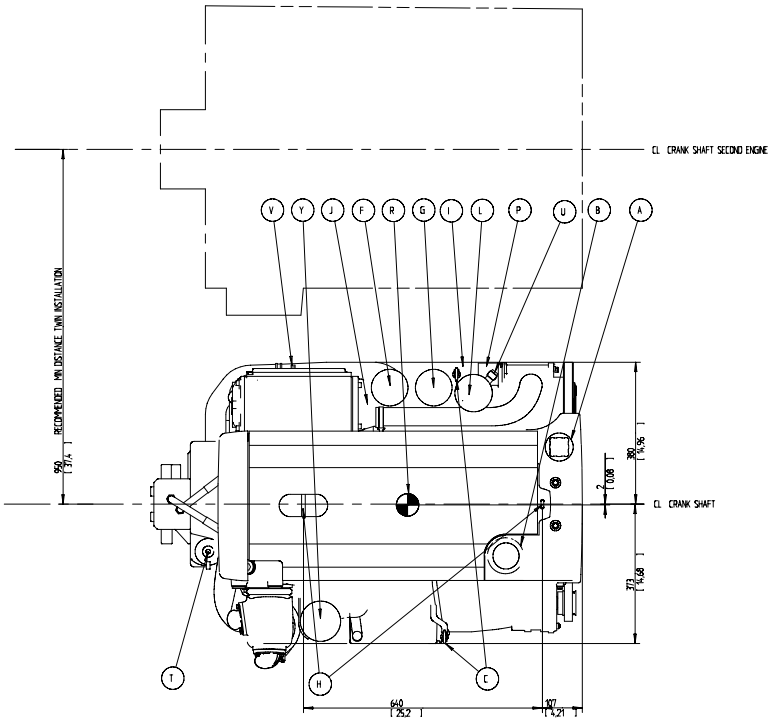

SCALE 15

SYMBOLS, DESIGNATIONS AND GENERAL DRAWING METHODS SIS 01-4005 ISO, SIS 10230/31	
The copying, distribution and utilization of this document as well as the communication of its contents to others without express authorization is prohibited. Offenders are liable to pay damages. All rights are reserved in the event of the grant of a patent, utility model or ornamental design registration.	Product line ENGINE D4 / H563AE
VOLVO PENTA	Document type DIMENSION DRAWING
	Document No 3591859 / Sheet title 01 / Sheet No 1(1)