3591860-01 - Heruntergeladen von www.volvopenta.com 19.02.2008 22:27:20

A 46696-00	SEE EDN	P/A 0 1 2	RELEASED
			06-09-25

- (A) WATER FILLER CAP, FRESH WATER
- (B) OIL FILLER CAP, ENGINE
- (C) OIL DIPSTICK, ENGINE LEFT OR RIGHT SIDE MOUNTED
- (D) ENGINE CONTROL UNIT
- (E) OIL DRAIN (WITH PUMP), ENGINE Ø12.5
- (F) OIL FILTER MAIN
- (G) OIL FILTER BYPASS
- (H) LIFTING EYE
- (I) WATER DRAIN, FRESH WATER
- (J) WATER DRAIN, SEA WATER
- (K) AIR FILTER
- (L) FUEL FILTER
- (M) HOT WATER OUTLET
- (N) HOT WATER INLET
- (P) SEA WATER INLET Ø38
- (Q) OIL DIPSTICK REVERSE GEAR
- (R) CENTRE OF GRAVITY
- (T) OIL FILTER AND OIL SUCTION REVERSE GEAR
- (U) FUEL INLET CONNECTION
- (V) FUEL RETURN TO TANK
- (X) ENGINE STOP
- (Y) CRANKCASE VENTILATION
- (Z) EXHAUST RISER Ø 102 (4") (OPTION)
- (AA) SEA WATER PUMP
- (AB) EXHAUST ELBOW Ø102 (4")
- (AC) EXTRA ALTERNATOR

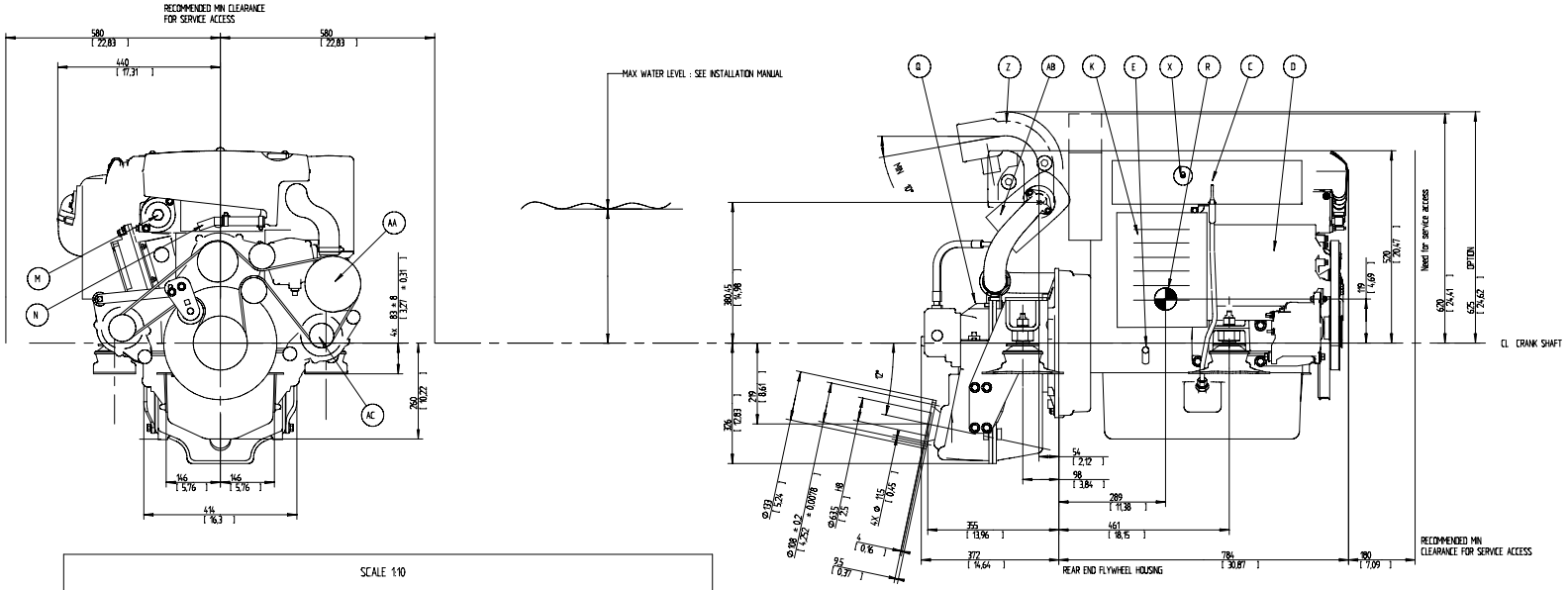

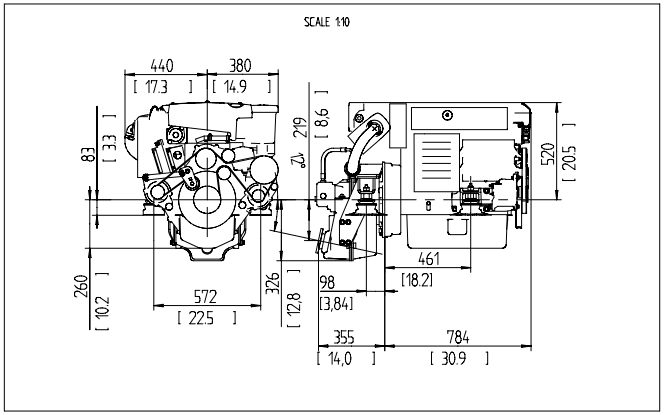

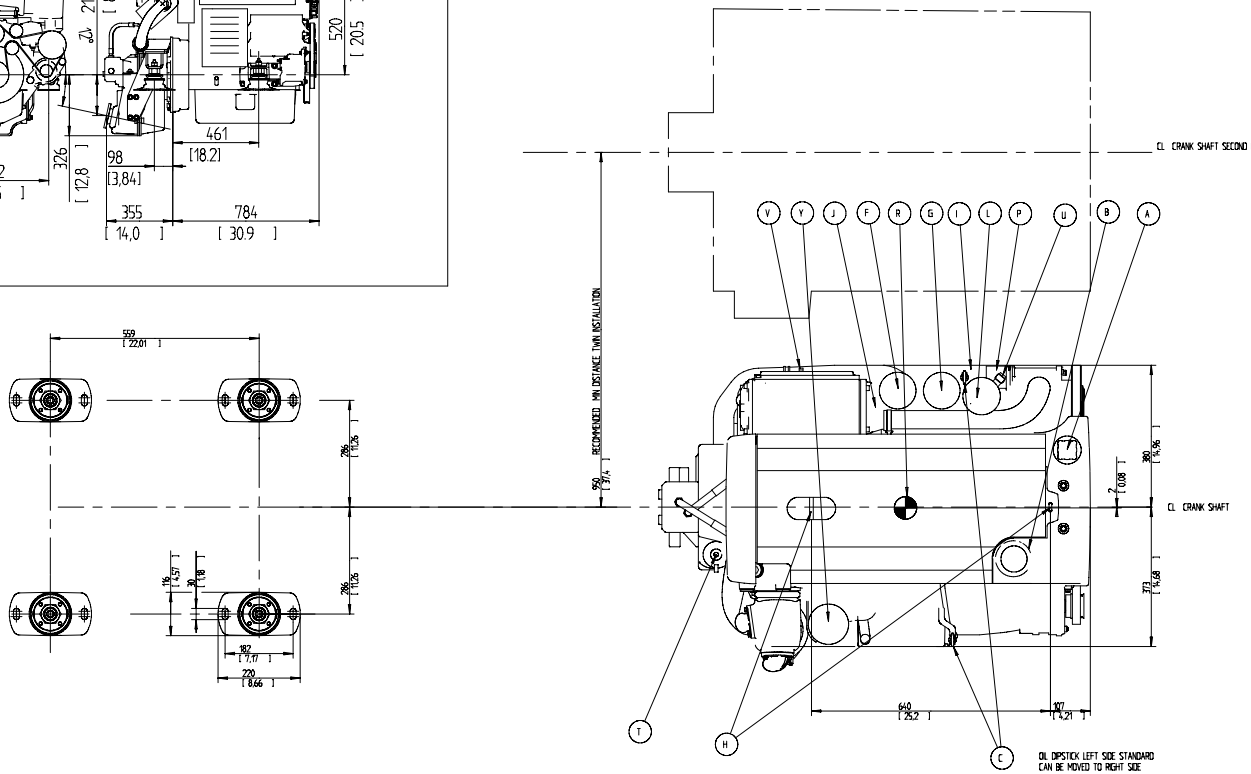

SCALE 15

SYMBOLS, DESIGNATIONS AND GENERAL DRAWING METHODS SIS 01-4005 ISO, SIS 16236:88	
The copyright, distribution and utilization of this document as well as the communication of its contents to others without express authorization is prohibited. Offenders are liable to the payment of damages. All rights are reserved in the event of the grant of a patent, utility model or ornamental design registration.	ENGINE D4 / H5639V
VOLVO PENTA	DIMENSION DRAWING
	3591860 / 01 / 1:10